Communicating Intent: Modern Engineering's Key New Responsibility

"Today, making major design decisions is far more about communicating, collaborating and building consensus than it ever has been in the past."

Published by:

LIFECYCLE INSIGHTS

Introduction

It's amazing how design has become so *democratic*.

Years ago, it was all about form, fit and function. Engineers would develop a concept, size according to calculations, check against standards and move on to the next task. There was always a design review cycle, but engineers maintained a good amount of autonomy and independence to make design decisions.

Today, design decisions must take far more into account. Manufacturability must be checked. Serviceability must be validated. Inventory and sourcing alternatives must be checked as well. Furthermore, design decisions must also be vetted inside engineering teams in groupthink activities. There's little doubt that design decision making has *changed*. ***For engineers, design is now far more about communicating, collaborating and building consensus than it ever has been in the past.***

Just as the design process has changed, the skillsets required of a modern engineer have also expanded. In addition to formidable technical skills, today's engineer also needs good presentation skills to engage other stakeholders in the enterprise. This comes from the fact that now more than ever; engineers need the communication skills to get everyone on the same page.

Likewise, the technologies that modern engineers need have expanded as well. Then and now, engineers have relied on widely proliferated Computer Aided Design (CAD) software and Computer Aided Engineering (CAE) software to enhance their technical skills. However, their purpose is to *design*, not *communicate*. And that begs a question: what tools help engineers communicate more clearly?

That's where this eBook comes in. Here, you will find an overview of a new type of software application that empowers engineers to author technical product communications. All without learning new complex software or recreating your models. Assisting engineers to communicate their intent without consuming their time.

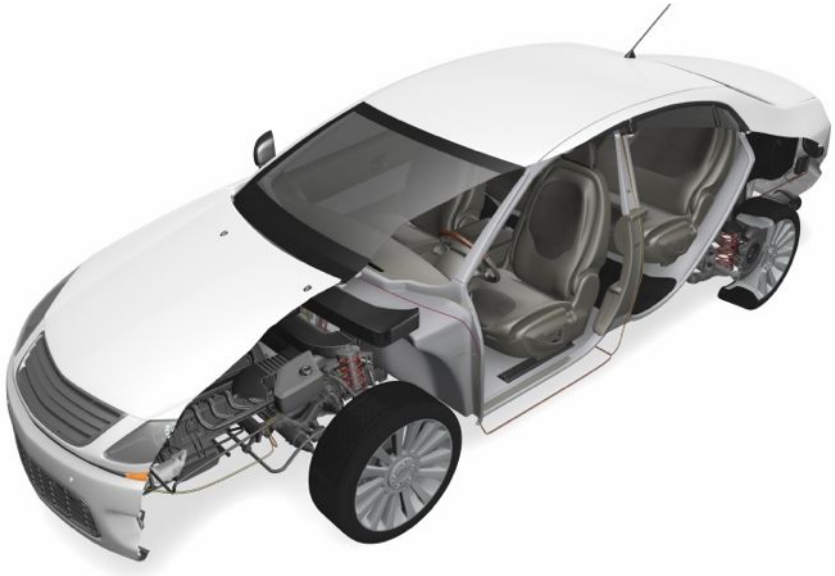

The Accountability Culture of Traditional Engineering

Engineering in the past was simpler, but also more daunting. At that time, the primary focus for the engineer was ensuring the product worked. This wasn't a type of 'fire and forget' responsibility, it was an accountability that manifested itself in a variety of ways. Individuals would place their signature on engineering drawings, to signify that they *personally* had approved the design. If the product failed, these signatures would identify responsible engineers so they could justify design decisions. This characterized the culture of *individual accountability* within engineering.

Ultimately, the system of accountability had wide-ranging impacts for engineers, driving them to seek better tools and technology for product design.

Focus on Individual Enablement

Given such a strong culture of individual accountability, enabling technologies adopted in engineering organizations focused on empowering engineers to create and simulate designs. Specifically, this sparked the development of the two main modern design systems:

- ***Computer Aided Design (CAD) software*** empowers engineers to check a product's form and fit with digital 3D models.
- ***Computer Aided Engineering (CAE) software*** allows engineers to check a product's function with digital simulations.

Today, these two types of software applications are defacto standards used in engineering organizations. They are great at virtually prototyping a product's form, fit and function before any budget needs to be spent on building prototypes. They also excel at creating documentation that manufacturing can use to make the product.

These tools do not, however, enable engineers to communicate more clearly with their peers or other stakeholders in non-technical organizations within the enterprise.

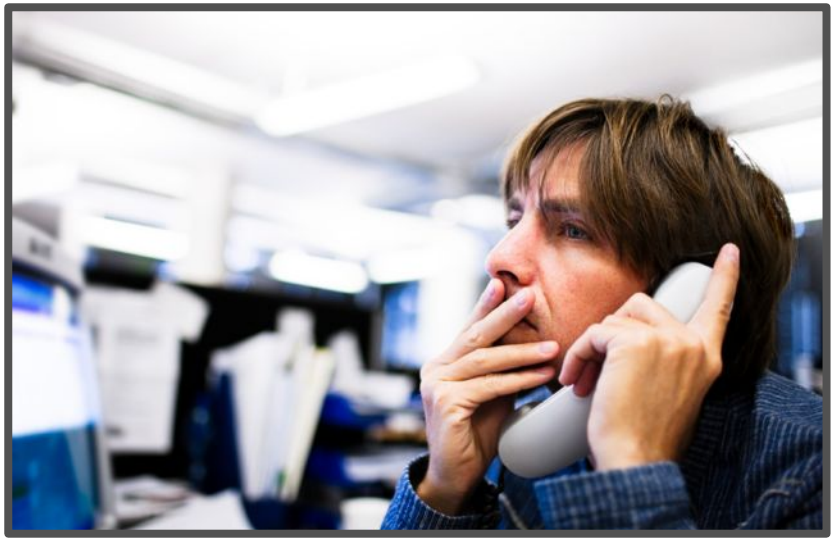

The Collaborative Demands on Modern Engineering

As we fast-forward to today, how have things changed? There have been two major trends in product development that have influenced the way engineering decisions are made in the development process.

Lifecycle Optimization Drives Wider Involvement

In today's world, designing for form, fit and function no longer cuts it. Parts must be purchased at competitive prices. Products are manufactured for the first time on the production floor. Service information needs to be provided directly to users in the field. To do so, engineers must work with stakeholders from manufacturing, service, procurement and other departments to make design decisions that take all of these enterprise considerations into account.

Greater Complexity Drives Design by Committee

Modern products are an incredibly complex mix of mechanics, electronics and software. Developing expertise in all these domains is practically impossible, requiring engineers to collaborate with technical specialists that could be located anywhere in the world. While complex, this vetting process helps engineering leaders to better address unconsidered issues as well as explore design alternatives. As such, design decision-making has progressively evolved into a collaborative, global activity.

Communicating Product Intent

As technical product experts, engineers are now required to expand their traditional role and act as the communication hub for development decisions. A primary responsibility for this role is establishing a technical context to help stakeholders make decisions. They often must communicate their *intent* for the product so those stakeholders are properly informed and can contribute.

The intent could be how the product functions, how to manufacture it on the shop floor or how to service it in the field. Further adding to the complexity, this intent may also need to be communicated externally in a non-technical context with design partners, component providers, or other non-engineering teams.

Why Not CAD?

What tool can enable engineers to communicate intent? The natural answer might seem to be CAD; but is that actually the *right* tool for the job?

The Implications of How CAD Works

At the most basic level, CAD enables two things. First, CAD creates deliverables that define products for manufacturing. Second, CAD allows engineers to iterate on new design alternatives. Because of that, there are certain implications. CAD contains not only the full set of geometric detail, but also the *complex modeling mechanism* used to create geometry. That works well for engineers that are familiar with CAD. But it is simply too complex for people from manufacturing, service and other organizations that have never used CAD before.

Ways for CAD to Communicate Intent

By default, engineers have fallen back on CAD to communicate *intent,* however doing so comes with inherent limitations.

- ***Native CAD:*** Engineers can create annotations, animations, and other information in CAD models to show their intent. However, getting that intent into a form that be easily viewed and interrogated by those outside engineering is a challenge.
- ***CAD Screenshots:*** Engineers can snap screenshots of CAD models and drop them into documents. While screenshots are much easier to consume, they must be manually updated when the design changes which is a time-consuming task. Furthermore, different sets of screenshots are required for different communication needs, increasing the complexity of the task further.
- ***Live CAD Sessions:*** Demonstrating design intent with live CAD sessions during face-to-face meetings can be effective but still challenging. The effort isn't easily repeatable, requires considerable engineering time to deliver, and often requires costly travel to bring global teams up to date.

In short, CAD was built to iterate on designs and document products for manufacturing: not communicate intent to broader audiences.

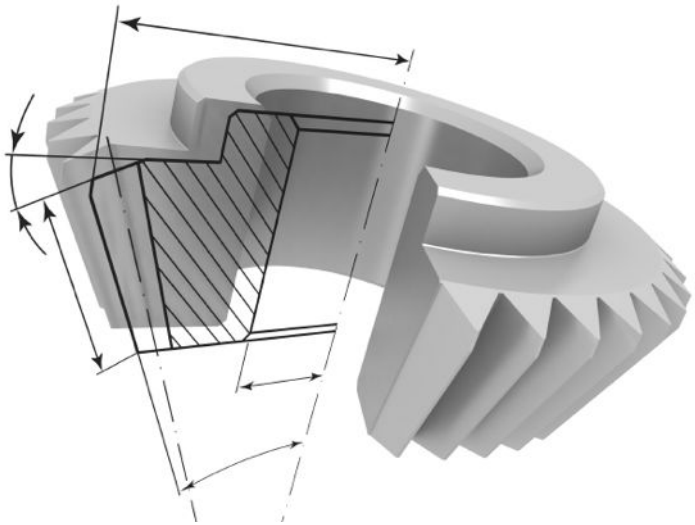

Technical Product Communications

A new solution has emerged to address an engineer's need to communicate intent. It allows them to create deliverables called ***technical product communications.*** And as you might expect, this purpose-built tool incorporates capabilities that let engineers communicate their intent to a variety of others in the enterprise.

Authoring Technical Product Communications

To start, there is a set of capabilities aimed at minimizing the burden on the engineer when they author technical product communications. Specifically, they:

1. ***Leverages existing CAD models:*** Engineers often have painstakingly created the product design in CAD. There's no reason to reinvent the wheel.
2. ***Embeds Intent in the CAD model:*** Engineers can quickly and easily *embed* their intent through annotations, illustrations, animations and many other forms in the *presentation* style context.

To be clear, technical product communication solutions *do not replace* CAD. Instead, they enhance the work engineers have already invested in creating design data. In short, technical product communications help maximize the value of existing 3D design data.

Consuming Technical Product Communications

Likewise, when it comes to consuming technical product communications, there are critical capabilities to ensure the deliverable effectively communicates intent, including:

- ***Publishing in a wide variety of formats*** that stakeholders can consume including documents, slides, spreadsheets, web content, pdfs and much more. In contrast, CAD models can only be accessed with CAD applications.
- ***Interactive content*** that lets the stakeholder investigate the engineer's intent independently. This might be replaying an animation, creating a new cross-section, taking a new measurement or some other interaction. But the key is to enable the stakeholder to do this independently.

Ultimately, the objective for these applications is twofold. First, it enables engineers to author technical product communications with minimal effort. Second, it publishes technical product communications in formats that stakeholders can consume and interrogate interactive content independently.

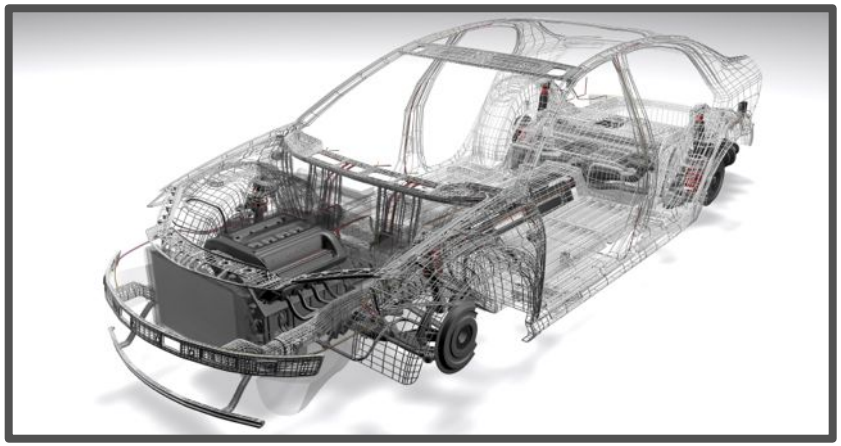

Propagating Design Change Automatically

In engineering, something is *always* changing. Sometimes it comes externally from a supplier. Other times it comes internally from peers or management. Regardless of where it originates, you have to be ready to adapt.

Given that fact, how do technical product communications deal with change? For example, imagine creating an animated assembly instruction, passing it off to a supplier, and then discovering a last-minute design change. What happens then?

The good news is that they can be associative. Essentially, that means that as the 3D model changes, the technical product communications can be updated automatically. In fact, it's very similar to the associativity between a 3D model and a drawing. Changes in the model are reflected in the drawing. And the same applies to this new deliverable.

Furthermore, content creators can control when the technical product communication updates. As you can imagine, when a design change is being explored for a potential change order, you don't want it changing automatically.

Why is all this important? It all comes down to the crazy hectic schedule of today's engineers. Forcing content to be updated manually defeats one of the main benefits of creating technical product communications in the first place. That is providing engineers with an effective *and* efficient vehicle for communicating product information.

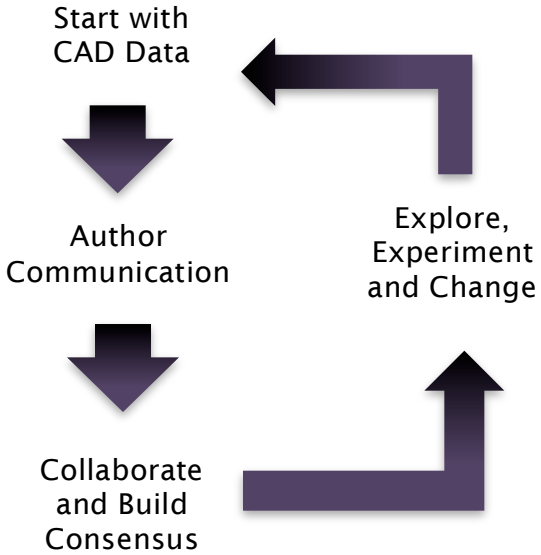

Not Just Documentation, but Communication

If you've been around the CAD industry, the idea of creating *technical product communications* may sound similar to authoring *technical documentation*. The reality is that these are two very different parts of the product design process. Let's think about them in context.

T*echnical documentation* is done by technical writers at the end of the design process using software applications that provide precise control over layouts, textual, and graphical elements. By and large, writers work with little knowledge of the design intent and rely on text and static images of the 3D CAD model provided by engineers. In recent years, great leaps forward have been made in terms of assembling documents out of separately controlled snippets of text. Changing one snippet of text can update multiple documents to the boon of technical writers. However, updates to the graphics and tech illustrations remain a manual chore.

Technical product communications addresses a different, but related need. Engineers need to communicate their intent to stakeholders throughout the design process. For this, they don't require full documentation, but more simply they need to capture their intent and share it in unambiguous manner. Technical product communication tools provide a way to make use of 3D design data to *visually* communicate ideas; for example with 2D illustrations or 3D animations. By conveying intent visually, and not textually, engineers can provide unambiguous communications that can be clearly understood by technical and non-technical audiences alike. Remember, a picture is still worth a thousand words.

The Business Value

Adding new systems to existing workflows during lean econimic times is no easy task. Margins are shrinking and budgets along with them. Even simple purchases now fall under the scrutiny of executives. That's why it's important to understand the business value that technical product communications bring.

- ***Impact Across the Product Lifecycle:*** The communication of an engineer's intent is critical to optimizing a product's design for enterprise considerations. That equates to manufacturing it right the first time, purchasing parts at the lowest price and increasing first time resolution rates for product service.
- ***Purpose-built to Deliver Results:*** Methods using CAD to communicate an engineer's intent are too limiting. That in turn draws engineers away from design work. But furthermore, it makes it hard for other stakeholders to consume the deliverable because it is in a CAD format. If other stakeholders don't know how to use CAD, they can't even take the first step to understand the engineer's purpose for the design.
- ***Return on Investment:*** Enabling engineers to more rapidly create product communications, and then keep them updated automatically means they can spend significantly more time on engineering tasks. In turn, resulting cost savings and productivity gains make a positive impact to the bottom line.

Summary and Conclusion

Engineering has *changed*. Engineers must now work with those on their engineering teams as well as stakeholders from far and wide in the enterprise. They must now take enterprise considerations into account alongside form, fit and function requirements when making design decisions. As a result, they must be able to clearly and concisely communicate their engineering intent.

Existing technologies are simply unable to effectively meet this demand. Up to this point, using CAD has been the only option. Built for design and not for communication, using CAD requires brute force, inordinate amounts of time and potential causes errors downstream.

There's good news for engineers, however. A new application has emerged to address technical product communication needs. It allows engineers to leverage 3D CAD models and then embed and deliver their intent in lightweight, sharable 2D and 3D forms.

What does it all mean? There are serious implications for engineers. Instead of spending all day on these activities, and catching up on design work at night, engineers can more efficiently create, update, and deliver information in the form of technical product communications. Stakeholders can work independently with these deliverables to clearly understand the engineer's intent. But most importantly, engineers are embracing this technology as a way to get back to the business of what they do best, designing great products.

Chad Jackson is the founding Industry Analyst for Lifecycle Insights and publisher of the blog engineering-matters.com. He investigates and writes about the issues that matter the most to engineering. He can be reached at (512) 284-8080 or chad.jackson@lifecycleinsights.com.